IS : 4894 - 1987

Indian Standard

(Reaffirmed 1994)

SPECIFICATION FOR CENTRIFUGAL FANS

(First Revision)

UDC 621·635-83

© *Copyright* 1988

BUREAU OF INDIAN STANDARDS
MANAK BHAVAN, 9 BAHADUR SHAH ZAFAR MARG
NEW DELHI 110002

Indian Standard

SPECIFICATION FOR CENTRIFUGAL FANS

(First Revision)

0. FOREWORD

0.1 This Indian Standard (First Revision) was adopted by the Bureau of Indian Standards on 27 August 1987, after the draft finalized by the Electric Fans Sectional Committee had been approved by the Electrotechnical Division Council.

0.2 This standard was originally published in 1968. This revision has been undertaken to take into account the experience gained since then and to align some of the safety requirements with the provisions of IS : 302-1979*. The amendments issued to the previous edition of the standard have also been incorporated in this revision.

0.3 The centrifugal fans covered by this standard are capable of working against pressures.

0.4 In preparing this standard, some assistance has been drawn from BS 848 : Part 1 : 1980 'Fans for general purposes : Part 1 Methods of testing performance', issued by the British Standards Institution.

0.5 For the purpose of deciding whether a particular requirement of this standard is complied with, the final value, observed or calculated, expressing the result of a test, shall be rounded off in accordance with IS : 2-1960*. The number of significant places retained in the rounded off value should be the same as that of the specified value in this standard.

*General and safety requirements for household and similar electrical appliances (*fifth revision*).

*Rules for rounding off numerical values (*revised*).

1. SCOPE

1.1 This standard covers the requirements and tests for centrifugal fans having impeller directly coupled to the shaft of electric motors or indirectly driven by electric motors. In the case of indirectly driven fans, the electric motor shall conform to the relevant Indian Standard.

1.2 The fans for use under free flow conditions are excluded from the scope of this standard.

1.3 Centrifugal fans for use in mines and hazardous atmospheres may require additional requirements to be met, not covered by this standard.

2. TERMINOLOGY

2.0 For the purpose of this standard, the following definitions, in addition to those given in IS : 1885 (Part 55)-1981*, shall apply.

2.1 Centrifugal Fan — A fan in which the air leaves the impeller in a direction substantially at right angles to its axis.

2.2 Fan — A rotary machine which maintains a continuous flow of air at a pressure ratio not normally exceeding 1·3.

NOTE — In this specification, the term 'fan' shall be used to mean centrifugal fan as supplied, without any addition to the inlet or outlet, except where such addition is specified.

2.3 Air — The term air has been used as an abbreviation for 'air or any other gas' except where referred to as 'atmospheric air'.

2.4 Standard Air — Atmospheric air having a specified weight of 1·2 kg/m³ which is dry air at 20°C with a barometric pressure of 760 mm Hg (W).

2.5 Absolute Pressure — That pressure which is exerted equally in all directions at a point. The absolute pressure of the ambient atmosphere is the barometric pressure.

2.6 Static Pressure — The difference between the absolute pressure at a point and absolute pressure of the ambient atmosphere. It is positive when above and negative when below the ambient pressure.

2.7 Velocity Pressure — The pressure equivalent of the air velocity at any particular point. It is always positive.

2.8 Total Pressure — The algebraic sum of the static pressure and velocity pressure at any particular point.

*Electrotechnical vocabulary: Part 55 Electric fans.

2.9 **Fan Total Pressure** (P_t) — The algebraic difference between the total pressure at the fan outlet pressure and the total pressure at the fan inlet (*see also* Fig. 1).

NOTE — The difference in pressures is the mean pressure when facing tube reading is employed.

2.10 **Fan Velocity Pressure** (P_v) — The velocity pressure corresponding to the average velocity at the fan outlet based on the total outlet area.

2.11 **Fan Static Pressure** (P_s) — The difference between the fan total pressure and the fan velocity pressure at the fan outlet.

2.12 **Inlet Volume** — The volume per unit time of air entering the fan (Q) expressed in m^3/h.

2.13 **Air Power (Total)** — That part of the energy, per unit time, imparted by the fan to the air in increasing its total pressure from that at the inlet to that at the outlet.

2.14 **Air Power (Static)** — This is equal to the air power (total) minus the nominal kinetic energy per unit time at the outlet.

2.15 **Impeller Power** — The energy input per unit time to the fan impeller.

2.16 **Shaft Power** — The energy input per unit time to the fan shaft including the power absorbed by such parts of the transmission system as constitute an integral part of the fan, for example, fan shaft bearings.

2.17 **Fan Duty (Total)** — The inlet volume dealt with by the fan at a stated fan total pressure.

2.18 **Fan Duty (Static)** — The inlet volume dealt with by the fan at a stated fan static pressure.

2.19 **Fan Total Efficiency** — The ratio of the air power (total) to the impeller power.

2.20 **Fan Static Efficiency** — The ratio of the air power (static) to the impeller power.

2.21 **Average Fan Total Efficiency** — The ratio of the air power (total) to the shaft power.

2.22 **Average Fan Static Efficiency** — The ratio of the air power (static) to the shaft power.

2.23 **Side Tube or Static Pressure Tube** — A tube which allows air to flow without disturbance past one or more small orifices having their axis at right angles to the direction of air stream in which it is placed.

2.24 **Side Tapping or Static Pressure Tapping** — A small opening in the wall of an airway, having its axis at right angles to the wall and so constructed as to allow the air to flow past without disturbance.

2.25 **Facing Tube or Total Pressure Tube** — An open-ended tube, the axis of which is coincident with the direction of the air stream in which it is placed. the open-end facing upstream, that is, against the direction of flow.

2.26 **Pitot Tube** — A combination of side tube and facing tube as one unit.

2.27 **Size of Fan** — The blade sweep in millimetres, the blade sweep being the diameter of the circle traced by the periphery of the impeller. This is also commonly known as wheel diameter.

2.28 **Cooling Air Temperature** — The temperature of the surrounding atmosphere in which the fan operates.

2.29 **Rating**

2.29.1 *Fan Performance Rating* — The work capable of being done by the fan over its entire range of operation expressed in terms of volume handled per unit time against total pressure generated at shaft powers indicated. This is normally shown in graphical fashion, following performance tests carried out in accordance with **10**.

2.29.2 *Point of Rating of a Fan* — A statement of fan performance for one condition of operation and includes fan size, volume, pressure and horsepower, to which fan laws are applicable.

2.30 **Type Tests** — Tests carried out to prove conformity with the requirements of this standard. These are intended to prove general qualities and design of given type of fan.

2.31 **Routine Tests** — Tests carried out on each fan to check the essential requirements which are likely to vary during production.

2.32 **Acceptance Tests** — Tests carried out on samples selected from a lot for the purpose of verifying the acceptability of the lot.

2.32.1 *Lot* — All fans of the same type, grade, category and rating, manufactured by the same factory during the same period, using the same process and materials.

3. SIZES

3.1 The following shall be the preferred sizes:

150, 225, 300, 375, 450, 600, 750, 900, 1 200 and 1 500 mm.

NOTE — Sizes of fans specified above are subject to a tolerance of ± 5 mm.

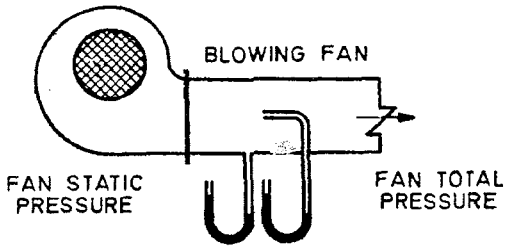

1A Fan Ducted at Outlet only

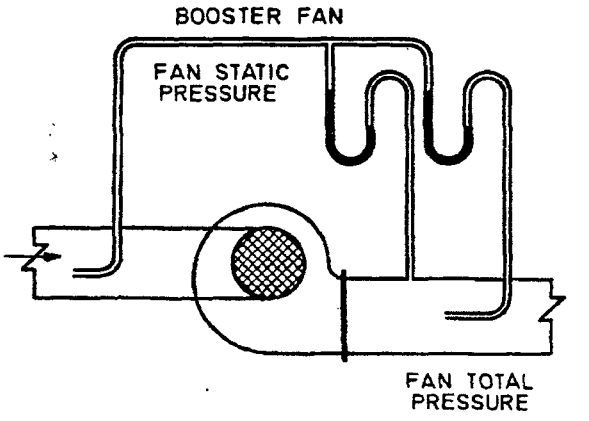

1B Fan Ducted at Outlet and Inlet

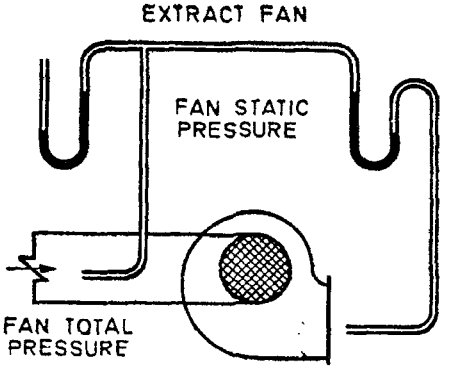

1C Fan Ducted at Inlet only

FIG. 1 DIAGRAMMATIC ILLUSTRATIONS OF FAN PRESSURE DEFINITIONS

4. RATED VOLTAGE

4.1 The preferred rated voltages for centrifugal fans shall be 230 and 240 V, single-phase; and 400 and 415 V, 3-phase (*see* IS : 585-1962*).

5. RATED FREQUENCY

5.1 The rated frequency shall be the standard frequency of 50 Hz.

NOTE — Nevertheless, fans made for other frequencies shall be considered to comply with the specification provided they do so in all other relevant respects.

6. DESIGN AND GENERAL CONSTRUCTION

6.1 Motor Enclosure — The enclosure of the fan motor shall be of the totally enclosed type or SPDP.

6.2 Rotor — The rotor of the fan motor shall be well-balanced.

6.3 Blades — Fans shall be fitted with an impeller consisting of a number of blades or vanes made from metal or other suitable material. The impeller assembly shall be securely fixed so that it does not loosen in operation.

6.4 Mounting — The means provided for securing the fan mounting or fan casing shall be such as to provide a secure fixing. Where the casing contains members to be clamped against an exterior wall, these shall be capable of being sealed to prevent the ingress of rain-water at the point of attachment.

6.5 Guards — Suitable designed guards shall be made available by the manufacturer for supply on request and shall be fitted either to the inlet or the outlet or both, to prevent accidental contact with the rotating blades. The guards shall be securely attached and shall be adequately rigid to resist accidental contact with the blades. When the guards are in two pieces, positive locking arrangement to keep the two pieces together should be made.

6.6 Bearings — If necessary, the manufacturer shall, on inquiry, furnish information about the type of bearing and instructions for their proper lubrication (*see* **9.1.2**). Proper types of bearings should be used to ensure a reasonable amount of silent operation.

*Specification for voltages and frequency for ac transmission and distribution system (*revised*).

6.7 Protective Measures — The fans shall have protective electrical insulation or be capable of being earthed. A fan with protective electrical insulation may be of all-insulated construction or have either double insulation or reinforced insulation.

6.7.1 In the case of fans intended to be earthed, an earthing terminal of adequate current-carrying capacity conveniently located and easily accessible shall be provided. In the case of fans for use on three-phase, two separate earthing terminals shall be provided.

6.8 Capacitors — Capacitors, if any, shall be easily replaceable and placed at sufficient distance from the windings so that their maximum working temperature is not exceeded. Capacitors shall be clearly marked with the maximum safe working temperature, and the corresponding voltage and capacitance. Capacitors shall comply with IS : 1709-1984*.

7. GENERAL AND SAFETY REQUIREMENTS

7.1 Protection Against Electric Shock — In the assembled fan, live parts shall not be accessible to the standard test finger (*see* IS : 1401-1970†). In the case of a double insulated fan, both basically insulated parts and live parts shall not be accessible to the standard test finger. This requirement is applicable for all positions in the normal use.

7.2 Electric Insulation — The electric insulation of the fans shall be adequate and the leakage current in normal use shall not be excessive.

7.2.1 When measured according to the method specified in **10.5**, the insulation resistance shall not be less than 2 MΩ.

7.2.2 *Leakage Current* — Requirements of the relevant Indian Standards on motors shall apply. The leakage current which may flow from the live parts to the accessible parts and metal foil on external insulating material connected together shall not exceed 300 μA (peak), that is 210 μA (rms).

7.2.3 There shall be no breakdown of the insulation when the fan is subjected to high voltage test as given in **10.3** or flash test (**10.4**), as the case may be.

7.3 Insulating Materials — Windings of fans and regulators (where provided) shall be insulated with either Class A, Class E or Class B insulating materials which comply with the limits of temperature-rise specified in **7.4**. These insulating materials are detailed in IS : 1271-1985‡.

7.4 Temperature-Rise — The fan motor and the regulator shall be tested at any cooling air temperature not exceeding 40°C, but whatever may be the value of this temperature, the permissible temperature-rise when measured as described in **10.13.2** shall not exceed the limits given in Table 1.

TABLE 1 PERMISSIBLE LIMITS OF TEMPERATURE-RISE

Sl No.	Part of Motor or Regulator	Temperature-Rise, °C			Method of Measurement
		Class A Insulation	Class E Insulation	Class B Insulation	
(1)	(2)	(3)	(4)	(5)	(6)
i)	Insulated windings of motors	60	75	80	Change of resistance
ii)	Insulated windings, if any, of regulator (with continuous running on any contact)	60	75	80	Change of resistance
iii)	Regulator resistance unit (with continuous running on any contact)	The temperature-rise shall not reach such a value that there is a risk of injury to any insulating material on adjacent parts of the regulator			Thermometer
iv)	External surfaces likely to be touched during normal usage	40	40	40	Thermometer

NOTE 1 — The thermocouples, if used, should be applied only to external surfaces which may be reached by an ordinary thermometer.

NOTE 2 — The temperature-rise values given above are for fans normally made to this specification to work in cooling air temperatures not exceeding 40°C. Nevertheless, fans made to work in higher cooling air temperatures may be regarded as complying with this specification provided the temperature-rise values are reduced corresponding to the increase in cooling air temperature. Such fans shall be specially marked.

7.5 Finish — All the surfaces of fan motor, blades and regulator, if any, shall be of corrosion resisting material or shall be suitably and durably protected against corrosion for specific applications.

7.6 Speed Regulators

7.6.1 It is not usual for fans covered by this specification to be provided with regulators. However, if regulators are required, this shall be a matter of agreement between the purchaser and the supplier.

7.6.2 Enclosures of the fan regulators shall be either of the ventilated type or the totally-enclosed type.

*Specification for capacitors for electric fan motors (*first revision*).

†Specification for accessibility test probes (*first revision*).

‡Thermal evaluation and classification of electrical insulation (*first revision*).

7.6.3 Where a regulator is provided with a capacitor not permanently connected across the motor terminals, provision shall be made so that the capacitor is discharged when the regulator is in the 'OFF' position.

7.6.4 The regulator handle or knob or push buttons shall either be of insulating material or, if of metal, shall be adequately insulated electrically and thermally so that its temperature-rise above ambient is limited to 20°C. All metallic parts associated with it shall be protected from accidental contact.

7.6.5 The regulator handle or knob shall be so placed that it may be safely and conveniently manipulated with definite positioning action. The handle or knob shall be so designed that it does not become loose in use. The 'Running' and 'OFF' positions of the regulator shall be distinctly and clearly marked and the indicator on the operating handle or knob shall correctly indicate the position of the regulator.

7.6.6 The regulators shall have mechanical stops for the regulator moving contact to prevent accidental contact with the metallic body of the regulator in the event of forced overtravel of the knob.

7.6.7 The mechanism of the regulator shall be so designed as to ensure positive contact at each running position. In the case of inductance type regulator, it is essential that no portion of the inductive winding should remain permanently short-circuited in any of the running positions.

7.7 Interchangeability — The motor of the fan of a particular size and model and its associated regulator and set of blades shall be interchangeable such that the performance of the fan keeps within the limits of standard.

7.8 Silent Operation — Precautions shall be taken in the manufacture of fans and regulators to ensure a reasonable degree of silence at all speeds.

NOTE — The need for specifying limits of noise levels (acoustical) of the fans is recognized. However, it has not been found possible to specify these limits at present on account of:

a) dependency of these limits on the actual location of the fans,

b) lack of data on the acceptable noise levels for different applications, and

c) lack of agreed definition of noise level and method of evaluating the same.

The criterion of noise level may, therefore, be subject to an agreement between the manufacturer and the purchaser.

8. PERFORMANCE REQUIREMENTS

8.1 Air Delivery Test — This test shall be carried out and calculations made in accordance with **10.12**.

8.2 Fan Characteristics — Fan characteristic curves shall be drawn after testing, considering not less than three test points determining a short part of the fan characteristic at different inlet volume flows and corresponding fan total or static pressure.

A system resistance line shall also be drawn, passing through the specified duty point such that the total or static pressure varies with the square of the inlet volume flow (*see* Fig. 2).

The most probable operating point for the fan shall be at the intersection of the fan characteristic and the system resistance line. The difference between the inlet volume flow at the intersection and the specified inlet volume flow (that is, the duty point) shall be recorded as the measure of departure of the fan from the specified performance. This value shall fall within the range of specified tolerances.

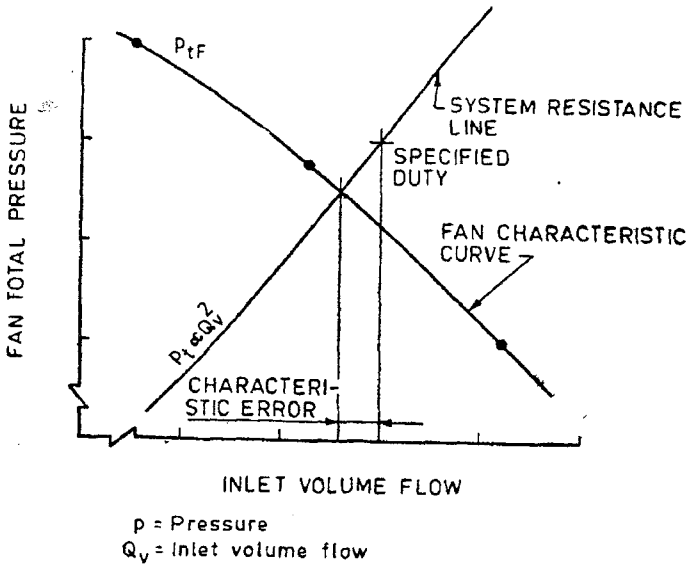

FIG. 2 EXAMPLE OF FAN CHARACTERISTIC CURVE AND TEST FOR A SPECIFIED DUTY

The fan characteristic may be extended to zero inlet volume and to zero static pressure conditions, but the portion of the characteristic which is beyond the range specified by the supplier shall not be taken into account for the purpose of performance detailed in Appendix A.

8.3 Tolerances on Ratings — The observed results expressed as percentage of the ratings assigned by the manufacturer shall be within the following limits:

Characteristic	*Tolerance* Percent
Volume flow	— 5
Static or total efficiency expressed as a percentage	— 5
Total power input	+ 10
Speed	± 10

Where a tolerance in one direction is omitted, there is no restriction on the value in that direction.

9. MARKING

9.1 Each fan shall be indelibly marked with at least the following information:

a) Manufacturer's name, trade name of fan (if any) and serial number;
b) Rated voltage(s) or voltage range and number of phases;
c) Frequency or range of frequency;
d) Consumption in watts;
e) Size of fan;
f) Rated speed of fan in rev/min;
g) Direction of rotation and direction of air flow;
h) Air delivery at stated duty; and
j) Country of manufacture.

NOTE — The trade name, voltage and the size of the fan shall be marked on associated regulator.

9.1.1 In case of fans provided with earthing terminals, these shall be marked in a legible and indelible manner on or adjacent to these terminals with the symbol ⏚

9.1.2 For additional information that the manufacturer may be requested to supply, see Appendix B.

9. .3 For additional information that the purchaser may be requested to supply, see Appendix C.

9.1.4 Centrifugal fans may also be marked with the Standard Mark.

NOTE — The use of the Standard Mark is governed by the provisions of the Bureau of Indian Standards Act 1986 and the Rules and Regulations made thereunder. The Standard Mark on products covered by an Indian Standard conveys the assurance that they have been produced to comply with the requirements of that standard under a well-defined system of inspection, testing and quality control which is devised and supervised by BIS and operated by the producer. Standard marked products are also continuously checked by BIS for conformity to that standard as a further safeguard. Details of conditions under which a licence for the use of the Standard Mark may be granted to manufacturers or producers, may be obtained from the Bureau of Indian Standards.

10. TESTS

10.1 Categories of Tests

10.1.1 *Type Tests* — The tests specified below shall constitute type tests and shall be carried out on three samples of same type, size and rating for fans up to and including 600 mm size and one sample of a type, size and rating for larger sizes:

a) High voltage (**10.3**),
b) Insulation resistance (**10.5**),
c) Earthing continuity (**10.6**),
d) Electrical input (**10.7**),
e) Fan speed (**10.8**),
f) Power factor (**10.9**),
g) Leakage current (**10.10**),
h) Starting (**10.11**),
j) Test for capacitor (**6.8**),
k) Air delivery (**10.12**), and
m) Temperature-rise (**10.13**).

10.1.2 *Acceptance Tests* — The following shall constitute the acceptance tests:

a) High voltage (**10.3**),
b) Insulation resistance (**10.5**),
c) Earthing continuity (**10.6**),
d) Electrical input (**10.7**), and
e) Fan speed (**10.8**).

10.1.2.1 A recommended sampling plan for acceptance tests is given in Appendix D.

10.1.3 *Routine Tests* — The following shall constitute routine tests:

a) Flash test (**10.4**),
b) Insulation resistance (**10.5**), and
c) A simple running test to determine that the fan mechanism is in working order.

10.2 General Conditions of Test

10.2.1 *Test Voltage and Frequency* — Unless otherwise specified, the test shall be carried out at rated voltage and frequency.

10.2.1.1 When a rated voltage is indicated on the name-plate, the test shall be conducted at the rated voltage. If the fan is specified for two or more distinct rated voltages with three or more supply terminals, the tests shall be carried out at the most unfavourable voltage. In case of doubt, the tests shall be carried out at all voltages.

10.2.1.2 When a rated voltage range is indicated on the name-plate, the test shall be conducted at the mean of the upper and lower limits of the range provided that the upper limit does not exceed the lower limit by more than 10 percent.

If the upper limit exceeds this value, the test shall be conducted at the voltage corresponding to either the upper limit or the lower limit whichever is more unfavourable to the particular test.

10.2.1.3 *Limits of voltage variation* — The variation in the test voltage shall not exceed ± 1 percent of the test voltage during air delivery tests. While taking the current and watt readings during these tests, however, the voltage shall be maintained at the test voltage.

10.2.2 For a fan rated with a range of frequency, the test shall be made at the frequency which gives the most unfavourable results. Tolerance on frequency shall be ± 1 percent.

10.2.3 *Limits of Error of Electrical Instruments* — The ammeters, voltmeters and wattmeters used for type tests shall have a class index 0·5 or better [*see* IS : 1248 (Part 1)-1983*]. For routine and acceptance tests, instruments of class index 2 may be used.

10.3 High Voltage Test

10.3.1 The source of supply for high voltage test shall be not less than 500 VA.

10.3.2 The high voltage test shall be applied to all new and completed fan motors in normal working conditions with all parts in place except the capacitors which should be disconnected. As type test, this test should preferably be done immediately after the temperature-rise test.

10.3.3 An ac test voltage at a frequency of 40 to 60 Hz approximately sine-wave form shall be applied and maintained for one minute without showing any kind of breakdown or flashover. The voltage should be applied starting with one-third of the full value, gradually increasing to the full value which should be maintained for specified period after which the voltage should be gradually reduced.

The test voltage shall be applied as follows:

a) For fan motors

1) Between live parts and other inaccessible metal parts (that is, over the functional insulation) in the case of double insulated motors	1 500 V
2) Between the inaccessible metal parts and the body (that is, over the supplementary insulation) in the case of double insulated motors	2 500 V
3) Between live parts and body (that is, over the reinforced insulation) for reinforced insulated motors	4 000 V

b) For regulators (where provided)

Between the two terminals with the regulator in the 'OFF' position	1 500 V

10.3.4 At the end of one minute, the test voltage shall be removed and the insulation-resistance test conducted as in **10.5**.

10.3.5 If this test is required to be repeated, the test voltage levels shall be reduced to 85 percent of the original value.

10.4 Flash Test — Every fan and regulator shall withstand the voltage 20 percent higher than that specified in **10.3.3** for one second when it is applied instantaneously between the points specified in **10.3.3**.

10.4.1 Any other test similar to the one specified in **10.4** may be carried out as a routine test provided it will ensure the fan passing the high voltage test covered by **10.3**.

10.5 Insulation Resistance Test

10.5.1 Insulation resistance test shall be carried out on fans and regulators immediately after conducting the high voltage or flash test, as the case may be.

10.5.2 The insulation resistance shall be not less than 2 megohms when tested with a dc voltage approximately 500 V applied between the points used for high voltage test or flash test.

10.6 Earthing Continuity Test — For fans intended to be earthed, the resistance shall not exceed 0·1 ohm between any exposed metal parts, except the rotating parts supported by metal bearings, and

a) the free end of the earthing conductor if the fan is fitted with a flexible cord, due allowance being made for the resistance of the earthing conductor of the flexible cord, or

*Specification for direct acting indicating analogue electrical measuring instruments and their accessories: Part 1 General requirements (*second revision*).

b) the earthing terminal or contact, when the fan is supplied without a flexible cord.

The resistance measurement shall be made with a current of 10A with a dc voltage not exceeding 6V.

10.7 Electrical Input Test — The electrical power input to the fan in watts shall be determined by running the fan at the test voltage and at the highest speed.

10.8 Fan Speed Test — The speed of rotation of the fan shall be determined by running the fan at the test voltage and its rated frequency. The method of measurement of the speed of fan shall be such that the speed of the fan is not appreciably affected.

10.9 Power Factor Test — The power factor of the fan when tested at the test voltage and the highest speed of the fan shall be not less than:

a) 0·90 for capacitor type fans, and

b) 0·60 for non-capacitor type fans.

10.10 Leakage Current Test — This test shall be carried out in accordance with **13.2** of IS : 302-1979*.

10.11 Starting — The fan shall be capable of starting up from rest at the lowest speed step when 85 percent of the rated voltage or 85 percent of the lowest voltage in the voltage range is applied.

10.12 Air Delivery Test — The following methods for determining the air delivery of the fan at the specified total or static pressure shall be followed. This test shall be carried out with the guard if any, in position.

10.12.1 The fan inlets shall be attached with a straight cylindrical airway of diameter D and minimum length $4D$; D may differ from the fan inlet diameter by not more than 20 percent larger or 5 percent smaller; a conical expander or reducer of 15° maximum included angle being used to connect the fan to the airway.

The fan outlet shall be attached with a parallel duct having the same cross section as the fan outlet (D_o) and length equal to twice its diameter ($2D_o$), if circular, or twice the mean of the adjacent sides, if ractangular; provided that no duct shall be fitted to the outlet side of the fan for the purpose of test in the case of a fan specified or designed for use with open outlet.

10.12.2 If the fan is fitted with an inlet flare, the outside diameter of the flare may be regarded as the fan inlet for connection to the test duct. If more convenient, the flare may be removed for the test.

10.12.3 The fitting of any additions to the fan for the pupose of this test shall be subject to the following provisions:

a) No additions or alterations solely for the purpose of a test shall be made to the fan as supplied exept that when an addition to the fan that may affect its performance has been specified, and unless otherwise agreed to between the manufacturer and the purchaser, the addition shall be fitted for the test. Such an addition shall then be regarded as a part of the fan.

b) An allowance shall be made for losses due to friction of the air in the airway between the fan and the point at which the readings are taken according to formula given in **10.12.10**(e).

c) In any test, the airways shall be made reasonably air-tight, and when provision is made for the insertion and manipulation by measuring instruments, care shall be taken to eliminate leakage as far as possible.

d) Care should also be taken to avoid any obstructions which may modify the air flow, either at the inlet or at the oultet of the airways.

10.12.4 To the inlet end of the test airway shall be fitted a conical inlet and four side tappings in accordance with Fig. 3 and with the following provisions:

a) The proportions and tolerances of the conical inlet are given in Fig. 3 together with relevant notes on manufacture and installation. The inlet airway diameter D used in the computation shall be measured after manufacture.

b) The four side tappings (*see* Fig. 4) at plane AA (*see* Fig. 3) shall be equally spaced at 90° on the cylindrical duct. The bore at the surface of the airway shall not exceed 4·76 mm in diameter and shall be straight, uniform and at right angles to the duct for at least 2 bore diameters. The openings shall be flush with the duct and free from burrs and countersinks. The four side tappings shall be connected to one limb of the manometer, each connection being of the same length, bore and arrangement of tubing to minimize the effect of flow due to difference of pressure at the tappings. The other limbs of the manometer shall be opened to the ambient atmosphere and the manometer reading shall be taken as equal to the average static pressure in the airway.

*General and safety requirements for household and similar electrical appliances (*fifth revision*).

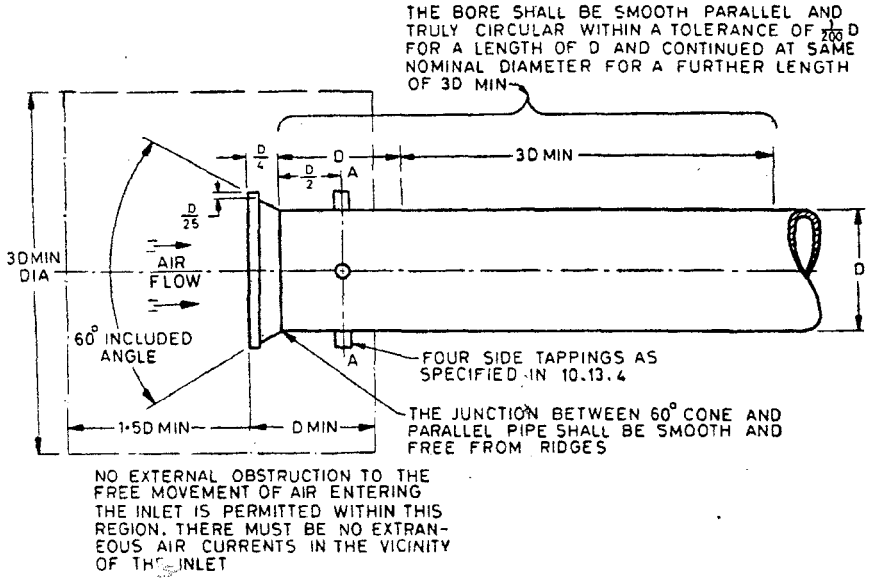

FIG. 3 CONICAL INLET

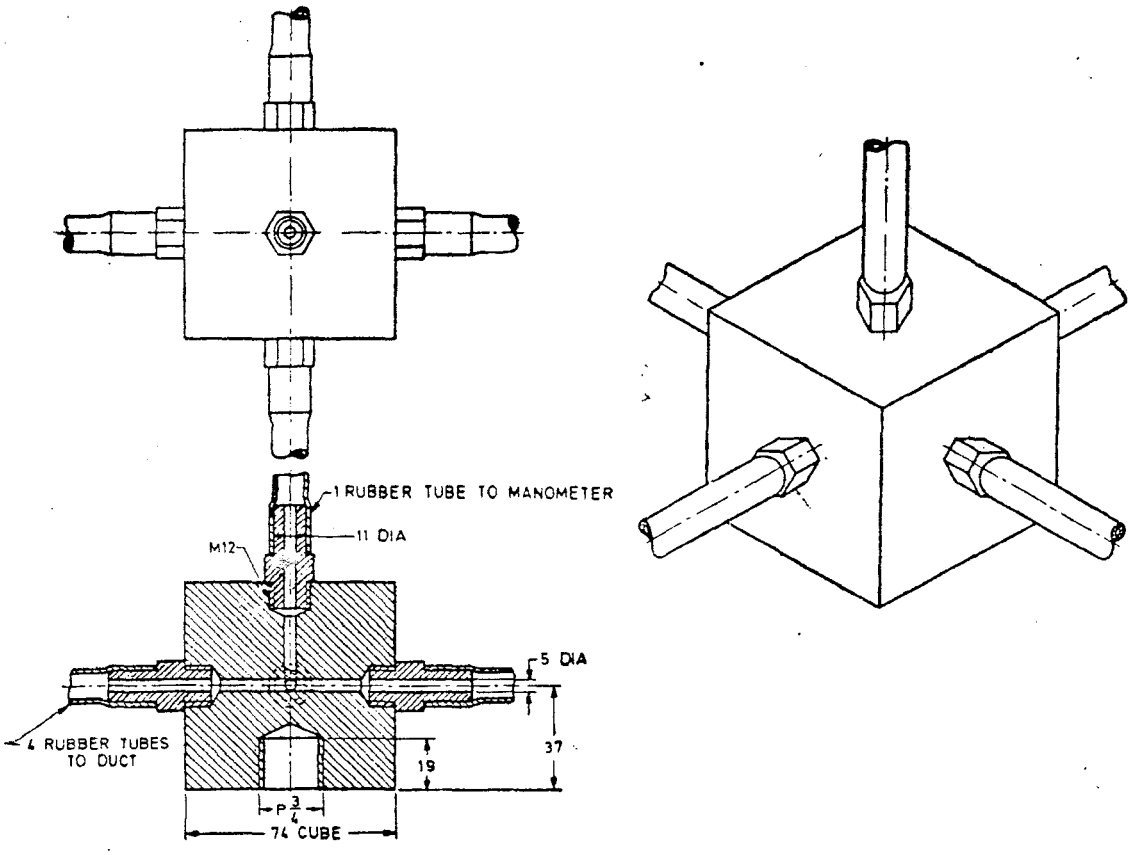

All dimensions in millimetres.

FIG. 4 METHOD OF CONNECTION FOR FOUR SIDE TAPPING TO TEST DUCT AND CONNECTION TO MANOMETER FOR INDICATION OF AVERAGE SIZE THROUGH ONE BLOCK

c) *Coefficient of discharge* — The coefficient of discharge of the conical inlet installed as above is given in Table 2. For Reynolds numbers of 400 000 and above, the coefficient of discharge is 0·975 and will cover the majority of fan tests. When the air flow, in cubic metres per hour, is numerically less than 16 700 times the airway diameter in metres, then the coefficient of discharge shall be taken appropriate to the Reynolds number given in Table 2.

TABLE 2 DISCHARGE COEFFICIENTS FOR REYNOLDS NUMBER (*Re*)

[*Clause* 10.12.4(c)]

REYNOLDS NUMBER (*Re*)	20 000*, 40 000, 60 000, 100 000, 200 000, 300 000, 400 000, and above
DISCHARGE COEFFICIENT, C_D	0·930, 0·940, 0·945, 0·953, 0·967, 0·973, 0·975

*A conical inlet shall not be used at Reynolds numbers less than 20 000.

Intermediate values of C_D may be obtained by linear interpolation.

The Reynolds number for standard air is given by $Re = \frac{23{\cdot}58\ Q}{D}$ using the notation of **10.12.10** and this may be taken to determine the coefficient of discharge with negligible error for all normal variations in ambient conditions.

10.12.5 A resistance comprising a screen having evenly spaced aperture of uniform size, not exceeding $D/20$ should be fitted at a distance D from the commencement of the cylindrical portion of the inlet. The screen may be composed of one or more layers of even wire or fabric supported by a wire guard.

10.12.6 The various static pressure data may be obtained by changing the screen or adding additional screens in the test duct. If a ring is secured inside the test airway to support the screen, or when a ring is used to stiffen the periphery of the fabric or other screen, the radial thickness of the ring shall not be greater than $D/100$ (*see* Fig. 5).

10.12.7 At plane *BB*, distant 2 *D* downstream from the resistance screen, there shall be four side tappings, similar to those in plane *AA*, and connected to the low pressure limb of a monometer, the other limb being connected to the ambient pressure in the vicinity of the fan discharge.

10.12.8 The volume per unit time at plane *AA* shall be computed by using formula (1) and corrected to fan inlet conditions for any change in the air density between plane *AA* and the fan inlet *BB*.

10.12.9 All temperatures in the inlet airway shall be taken by placing the thermometer with its probe inside the airway near the section *BB*. The inlet volume so compiled shall then be used to calculate the velocity pressure at plane *BB* using formulae (2) and (3). For the purpose of this test the algebraic sum (with the sign reversed) of the static pressure at plane *BB*, and the velocity pressure at plane *BB*, plus a friction allowance for all test ducting downstream of plane *BB*, in accordance with formula (5) shall be taken as the fan total pressure.

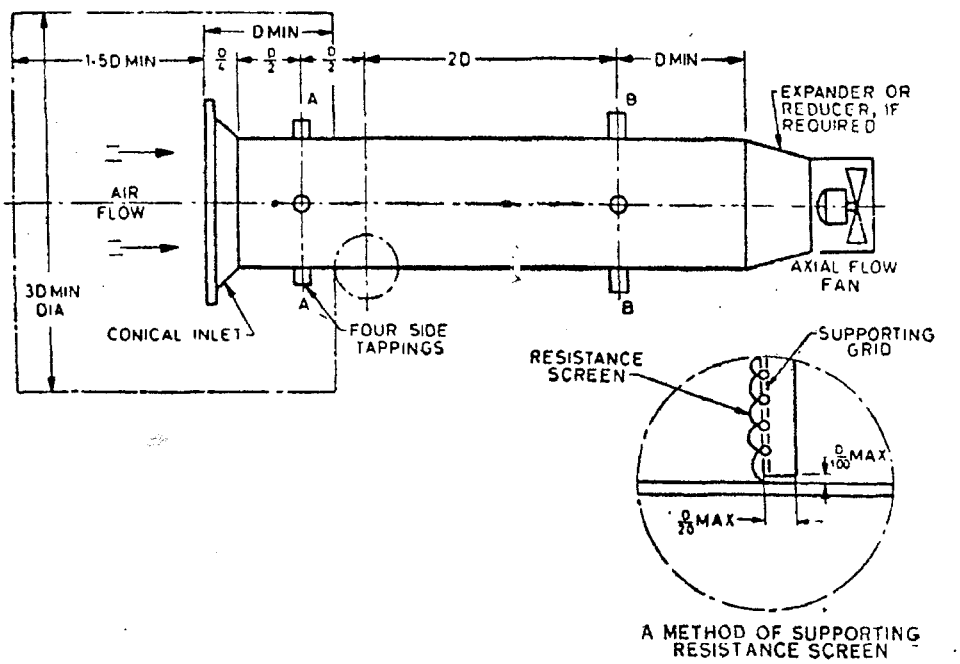

FIG. 5 ARRANGEMENT FOR AIR DELIVERY TEST

10.12.10 *Formulae and Computation of Results* — The following formulae should be used for the computation of results of the tests laid down in **10.12.**

a) Inlet volume per unit time $Q = 12\,500 \times C_D \times D^2 \sqrt{\frac{\Delta P}{W_t}}$ m³/h ..... (1)

where

C_D = coefficient of discharge,

D = diameter of airway in metres,

ΔP = difference between ambient pressure in the vicinity of the inlet and the average pressure at the side tappings at plane AA in mm H_2O, and

W_t = weight of air in airway at the test temperature t°C in kg/m³.

b) Weight per unit volume of atmospheric air at test section

$$W_t = 1{\cdot}205 \times \frac{B + 0{\cdot}073\,7\,P_s}{760} \times \frac{293}{(273 + t)} \text{ kg/m}^3$$

which may be very closely approximated as

$$W_t = 1{\cdot}2 \times \frac{B + 0{\cdot}073\,7\,P_s}{760} \times \frac{293}{(273 + t)} \text{ kg/m}^3 \quad \ldots\ldots (2)$$

[taking 1·205 kg/m³ (approximated to 1·2 kg/m³) as the weight of standard air at 20°C and 760 mm Hg].

where

B = barometric pressure in mm Hg at the time of test, and

P_s = static pressure in mm H_2O.

c) Velocity of air at a point V

$$= 16\,000\sqrt{\frac{P_v}{W_t}} \text{ m/h} \quad \ldots\ldots (3)$$

d) Average velocity of air in the airway $\bar{V}$

$$= \frac{Q}{A} \text{ m/h} \quad \ldots\ldots (4)$$

where A is the area of airway in square metres.

e) Friction loss in airway P_f

$$= 0{\cdot}02\,\frac{L}{D} \times P_v \text{ mm } H_2O \quad \ldots\ldots (5)$$

where L and D are the length and diameter of airway in metres, and P_v is velocity pressure in mm H_2O.

10.13 Temperature-Rise Test

10.13.1 *Measurement of Cooling Air Temperature During Tests* — The cooling air temperature shall be measured by means of several thermometers placed at different points around the fan motor at a distance of 1 to 2 m and protected from all heat radiations and extraneous draughts. The thermometers used for this test shall be accurate to ± 0·5°C.

The value to be adopted for the temperature of the cooling air during a test shall be the mean of the readings of the thermometers taken at equal intervals of time during the last quarter of the duration of the test.

10.13.2 *Measurement of Temperature-Rise* — The temperature-rise measurements shall be carried out by the method indicated in Table 1, immediately after the air delivery test or after the fan has been run long enough to ensure that the temperature-rise has reached a steady state, using the following procedure.

10.13.2.1 Air temperature-rises to be measured by thermometer method [items (iii) and (iv) of Table 1)] shall be taken at the hottest accessible surface of the parts, as also on the parts which are likely to cause injury to any adjacent insulating material.

10.13.2.2 The method of measurement of temperature-rise by change in resistance is given below:

The temperature-rise $t_2 - t_1$ (for copper windings) may be obtained from the ratio of the resistances by the formula $\frac{t_2 + 235}{t_1 + 235} = \frac{R_2}{R_1}$

where

R_2 = resistance of the windings at temperature t_2 (°C) at the end of the test, and

R_1 = initial resistance of the windings at temperature t_1 (°C).

From the above, the hot temperature (t_2) may be expressed as:

$$t_2 = \frac{R_2}{R_1}(t_1 + 235) - 235$$

APPENDIX A

(*Clause* 8.2)

METHOD OF CALCULATION OF EFFICIENCY

A-1. The performance of the fan at a stipulated air delivery, Q and fan total pressure P_t shall be expressed by the 'total efficiency' η_t which may be expressed as the ratio of air power (total) P_{total} to the shaft power P_{shaft}.

$$\text{Thus } \eta_t = \frac{P_{total}}{P_{shaft}} \quad \ldots\ldots (6)$$

the air power (total) may be obtained from the formula:

$$P_{total} = 2{\cdot}725 \times 10^{-3} \times Q \times P_t \times K_p \text{ watts} \quad \ldots\ldots (7)$$

where

Q is in m^3/h,

P_t is in mm H_2O, and

K_p is the compressibility coefficient having a value of unity for fan static pressure not exceeding 255 mm H_2O under normal atmospheric condition. At higher pressures, K_p should be determined by reference to Fig. 6, calculating the pressure ratio by means of the formula given below:

$$K_p = \frac{\left(\rho^{\frac{r-1}{r}} - 1\right) r}{(\rho - 1)(r - 1)} \quad \ldots\ldots (8)$$

where

r = ratio of specific heat at constant pressure to specific head at constant volume.

The value of r may be taken as 1·4 for atmospheric air.

Pressure ratio (ρ) (for exhausting conditions which apply to test method described in **10.12**) is given by

$$\rho = \frac{B}{B - 0{\cdot}073\ 7\ P_s} \quad \ldots\ldots (9)$$

using the notations of **10.12.10**(b).

The shaft power, P_{shaft} shall be obtained, for the purpose of this specification from the following relation:

$$P_{shaft} = [\ P_L - (\text{fixed losses} + \text{copper losses} + \text{stray load losses})\ ] \text{ watts} \quad \ldots\ldots (10)$$

where

P_L is the power input to the motor with the fan coupled to the motor and run at rated duty and speed in watts.

The fixed losses and copper losses shall be calculated in accordance with the details given in IS : 4889-1968*. The copper losses shall be calculated on the corresponding current at the duty point of the fan. The stray load loss is assumed to be 0·5 percent of the shaft power.

*Methods of determination of efficiency of rotating electrical machines.

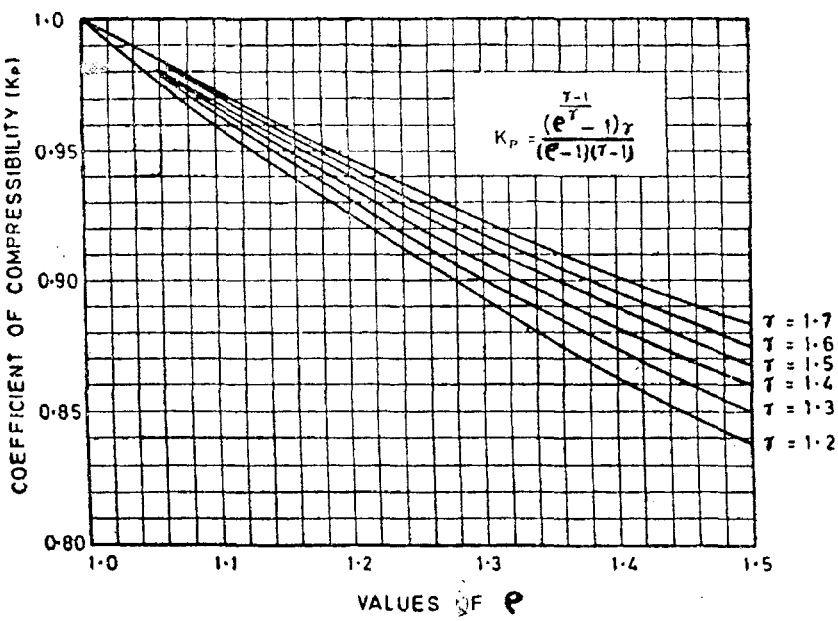

FIG. 6 GRAPH FOR DETERMINING THE COEFFICIENT OF COMPRESSIBILITY (K_P) WHEN THE GUARANTEED FAN STATIC PRESSURE EXCEEDS 255 mm H_2O UNDER NORMAL ATMOSPHERIC CONDITIONS